FEATURES

- Accuracy: ± 0.1% R.O.
- Steady voltage, current and low ripple output
- Plug-in type
- DC 24V for two wire transmitter

■ MODEL: S4 - DT - I – □ – □
INPUT : DC 4-20 mA

NO.	DC Output Range	Load R.	NO.	Power Supply
10	0 ~ 100mV	≧ 100KΩ	1	AC 110V
11	0 ~ 1V	≧ 500Ω	2	AC 220V
12	0 ~ 5V	≧ 500Ω	3	DC 110V
13	0 ~ 10V	≧ 500Ω	4	DC 48V
14	1 ~ 5V	≧ 500Ω	5	DC 24V
15	-10 ~ 10V	≧ 5KΩ	0	Option
16	0 ~ 1mA	≦ 10KΩ		
17	0 ~ 10mA	≦ 1.5KΩ		
18	0 ~ 20mA	≦ 750Ω		
19	4 ~ 20mA	≦ 750Ω		
20	20 ~ 4mA	≦ 750Ω		
00	Option			

■ SPECIFICATION

Accuracy	± 0.1% R.O.
Power supply	AC 110 V ± 15% , 50/60HZ AC 220 V ± 15% , 50/60HZ DC 24V,48V,110V ± 10%
Power consumption	AC ≦ 5VA,DC ≦ 3W
Input resistance	≦ 50Ω(20mA)
Short circuit protection current limited	40 mA Maximum
Protected time duration	No limited
Response time	≦ 400 msec
Output ripple	≦ 0.5% R.O.(peak-peak)
Span adjustment range	≧ ±10% R.O.
Zero adjustment range	≧ ±5% R.O.
Operating temperature rang	0 ~ 60 ºC
Storage temperature rang	-10 ~ 70 ºC
temperature rang coefficient	≦ 150PPM/ ºC
Max. relative humidity	95%
Isolation	Input/Output/Power/Case
Insulation resistance	≧ 100MΩ, DC 500 V
Dielectric strength	Input/Output/Powe AC1.8KV/minute All terminal/Case AC1.8KV/minute
Impulse withstand test	3KV, 1.2 x 50 μs Common mode & Differential mode

■ CONNECTION DIAGRAM

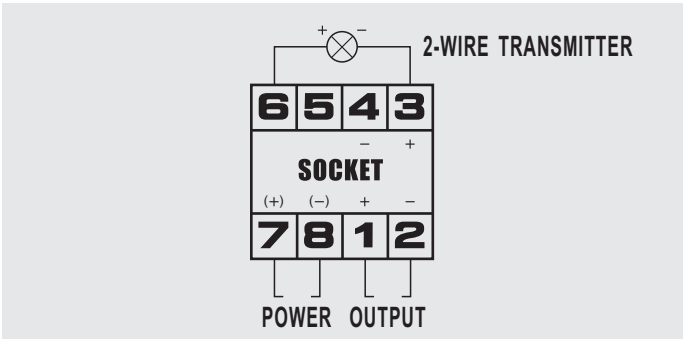
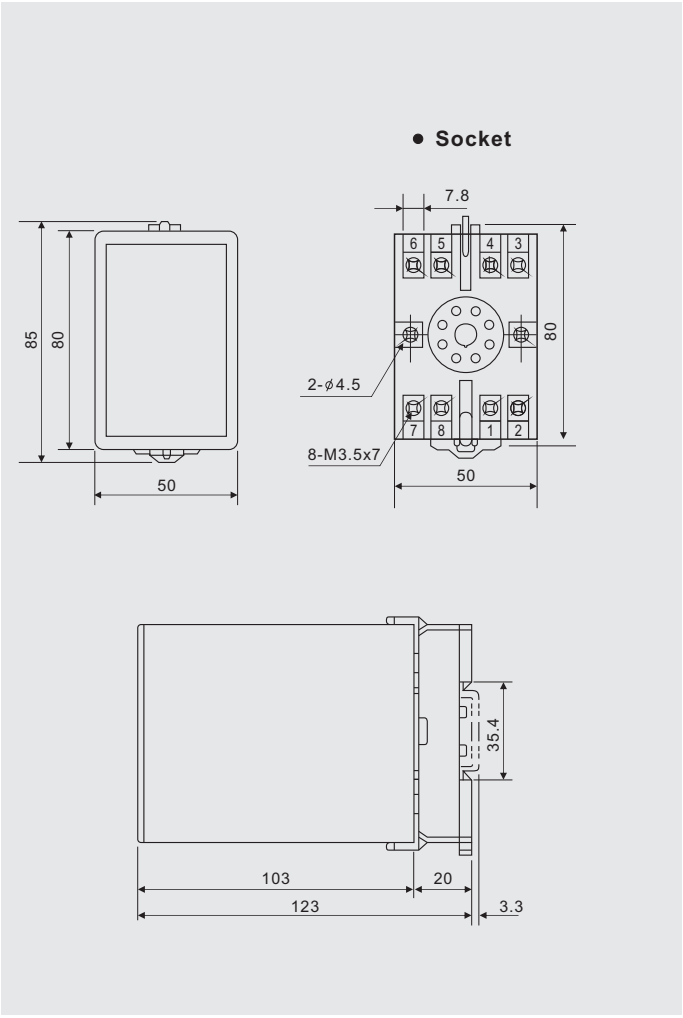
■ DIMENSIONS (UNIT : mm)